Hand pumps — PMO 50 byB-e-s — Tech sheet

DETAILS
without release hand knob
with pressure relief valve
double acting hand pump for single acting cylinder
for fixing to wall

SPECIFICATIONS
Cast iron body
Piston treated with Niploy
White zinc plated support lever
Lever connection Ø 27
White zinc plated external parts
Standard colour black
Pressure relief valve standard
setting: 100 bar

HYDRAULIC DIAGRAM

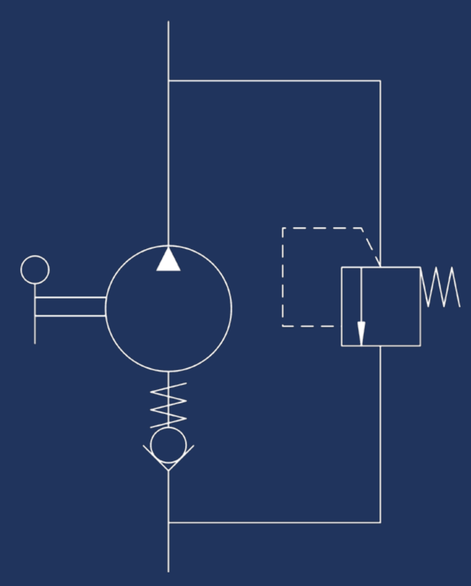

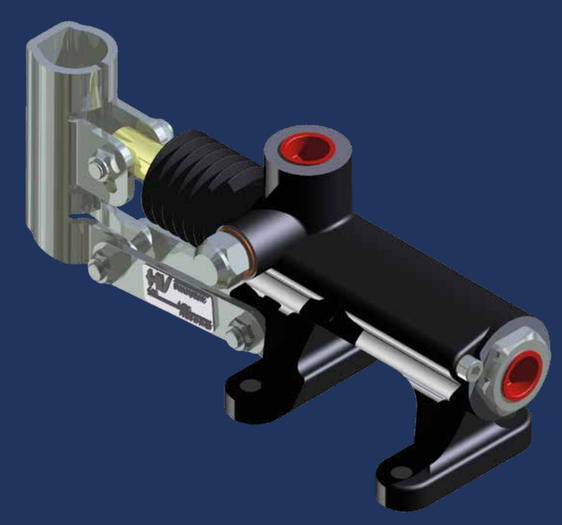

EFFORT DIAGRAM

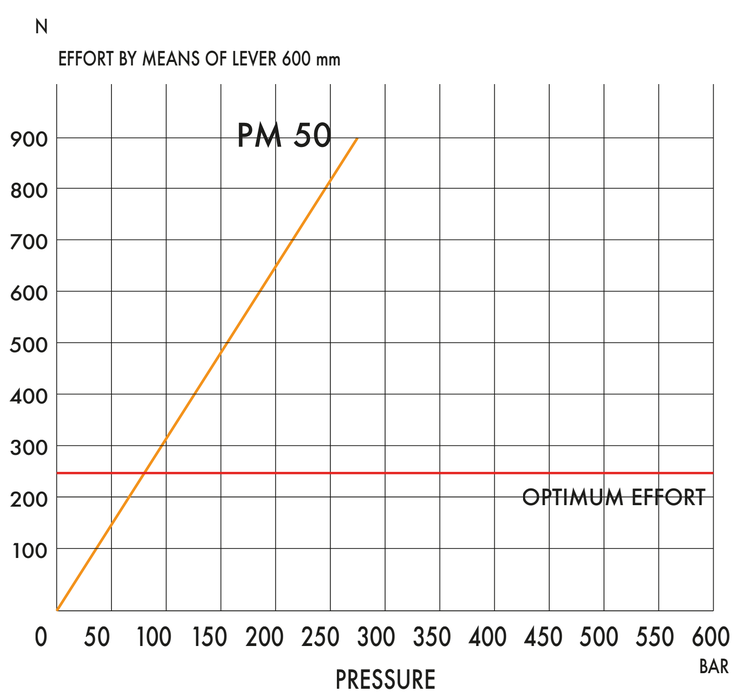

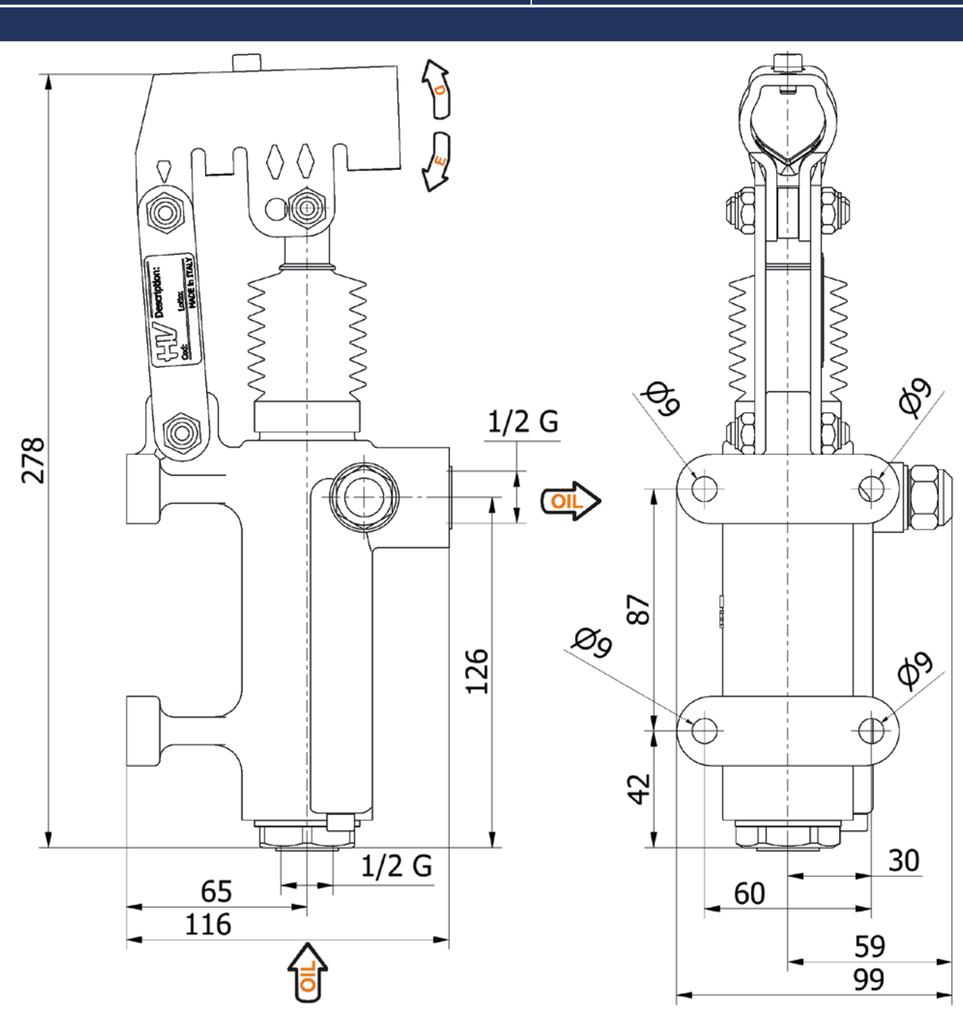

DISPLACEMENT cm³	A mm	B mm	C mm	D °	E °	ACTUAL DISPLACEMENT cm³	PRESSURE BAR		MASS KG	CODE
							OPTIMAL	MAX		
50	- -	- -	- -	38	37	43,825	80	280	3,400	6077.0036

HV Hydraulic s.r.l. | Take YOU to another WORLD

Head Office
Via dell'Agricoltura, 162 Loc. Castello di Serravalle
40053 VALSAMOGGIA (BO) Italy

Warehouse
Via del Lavoro, 111 e 135 Loc. Castello di Serravalle
40053 VALSAMOGGIA (BO) Italy

Tel. + 39 051 670.50.11 – Fax +39 051 670.53.74
P.IVA/C.F. 02390201206 – R.E.A. 435998 – Codice Univoco: 7HE8RN5
E-mail: info@hvhydraulic.com - Web: www.hvhydraulic.com